# PI PICO 2W

- Power
- GND
- Control
- CircuitPython Name
- Arduino Name
- Digital
- SPI
- UART
- I2C
- PWM
- Analog

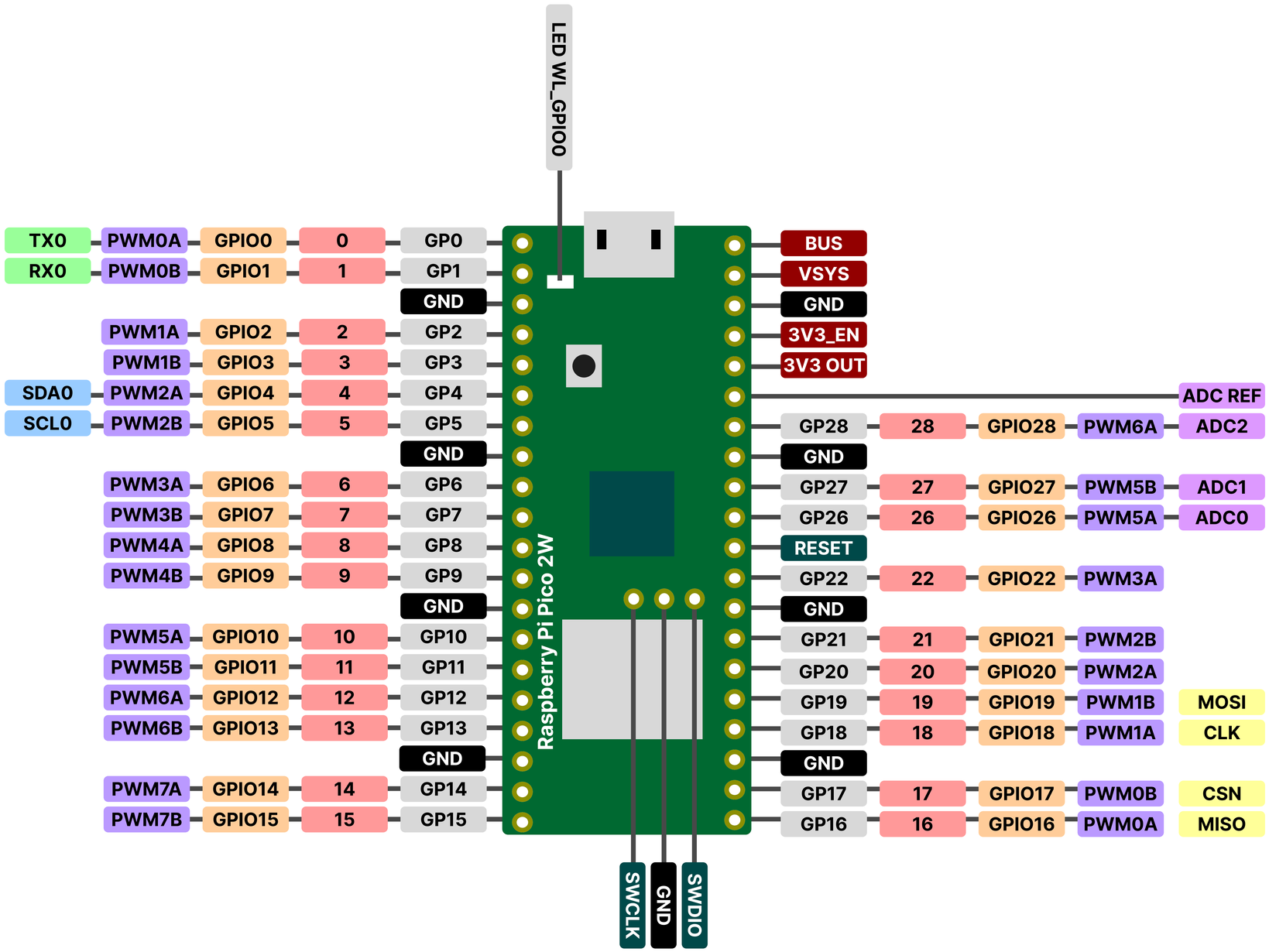


Version: 2026.06.30

Developed by: Jerry de Vos - StudioLab IDE - TU Delft